DR4500A Truline®
HTST, STLR, and Pasteurization Flow Circular Chart Recorders

DR45AH - HTST (High Temperature Short Time)
DR45AS - STLR (Safety Thermal Limit Recorder)
DR45AP - Pasteurization (Flow)

Specification

Function

Honeywell's Truline recorder is a one to four-channel, microprocessor-based, circular chart recorder. Its "one-pen" stylus printhead produces up to four analog traces and prints alphanumeric chart data on a blank heat-sensitive chart. All four traces share the *same time line* reference, which the Truline prints. This eliminates the error caused by pen alignment offsets in conventional pen designs.

Since the Truline prints the chart and generates the analog traces at the same time, there is no error due to variations in chart size caused by changes in temperature and humidity.

With microprocessor electronics and single printhead, the Truline HTST/Pasteurization recorder is easily configured by users to meet a variety of application requirements for food processing.

The HTST/Pasteurization models are designed to meet the requirements of the U.S. Department of Health and Human Service's Grade A, Pasteurized Milk ordinance.

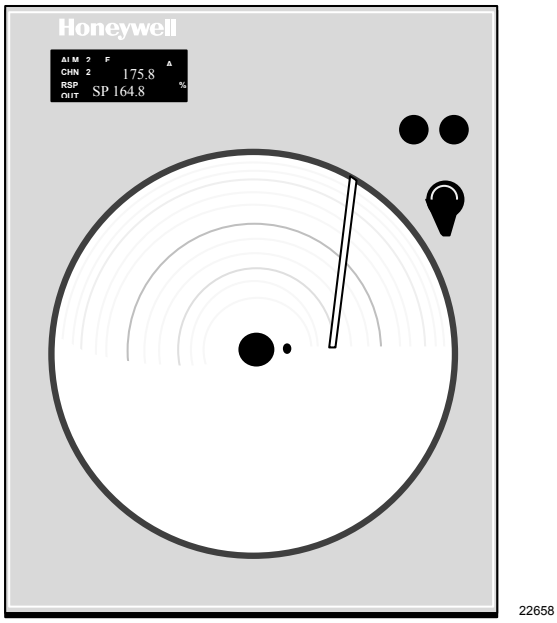

Figure 1—DR4500A Truline Recorder - HTST/STLR/Flow Models

Features

Dual Displays — Bright, vacuum fluorescent, alphanumeric digital displays make pasteurization process data instantly available to your operation.

Bargraph Display — indicates deviation of ± 10% of input span with center bar, On-control indication.

User Configurable — English language prompts, coupled with simple keystroke sequences, make configuring the recorder easy and straightforward. You can set and/or alter operating parameters to fit your requirements without re-calibration.

Four Channel Input — Up to four channels that monitor process variables from a variety of sensor types help reduce panel space requirements.

All-Purpose Chart — One all-purpose, blank chart eliminates the need for ordering and stocking several types of charts. You can design the chart to match their specific application.

"One-pen" Stylus Print Head — prints configurable alphanumeric chart data including time and trend lines. This automatically compensates for chart width variations caused by changes in the ambient relative humidity.

Analog Inputs — Two inputs for recording and control on the HTST model. One input for control on STLR. Third and fourth inputs available as options. One to four inputs are available for the pasteurization flow model.

Accutune II™ — This standard feature provides a new, truly plug and play tuning algorithm, which will, at the touch of a button or through a digital input, accurately identify and tune any process including those with deadtime and integrating processes. This speeds up and simplifies start-up plus allows re-tuning at any setpoint.

Fuzzy Logic — This standard feature uses fuzzy logic to suppress process variable overshoot due to SP changes or externally induced process disturbances. It operates independently from AccutuneII™ tuning. It does not change the PID constants, but temporarily modifies the internal controller response to suppress overshoot. This allows more aggressive tuning to co-exist with smooth PV response. It can be enabled or disabled depending on the application or the control criteria.

Time/Date — To guard against unauthorized chart advancement, an integral real-time clock provides accurate timing for the recorder's time and date printing, and also any operator changes. A 10-year life battery backup assures correct timing even when power fails.

Printed in U.S.A. © Copyright 2002—Honeywell

Features, continued

Control Output — Versatile PID controller lets you configure the exact control action (3-mode or on-off) needed to control:

- Hot Water Loop (HTST) and Flow Diversion Valve position *(HTST and STLR)*
- Flow Rate and Flow Diversion Valve position *(Pasteurization)*

Diversion Valve Position Indication - HTST and STLR (Optional on Flow Version) Red and Green lights, visible through the door, indicate flow diversion valve position. Red indicates flow diversion; while green indicates forward flow.

A digital input activates a frequency pen that records the valve position on the outer portion of the chart.

Dual Setpoint Diversion —- using the Digital Input capability, the DR45AH model can be set up to switch between two specific setpoints and to record the set-point change on the chart.

External Interface Selections

- ***Digital Input*** — Activates the pen that records the divert valve position on the chart.
- ***Auxiliary Output*** — there is also a 4 to 20 mA current output available. It can be used to retransmit a process variable. In addition, the 4-20 outputs on the control board can be used as an auxiliary output if not used for control.

Options

- **Third and Fourth Input** - Used for monitoring additional process variables such as Cold Milk Temperature or other temperatures. When Digital Reference temperature measurement at the divert valve is selected, Input 1 is the Digital Reference and Input 3, if enabled, becomes the Hot Water temperature input.
- ***Door Options*** — Choice of gray, black or blue doors with standard latch or optional lock. Heavy duty Stainless Steel doors available

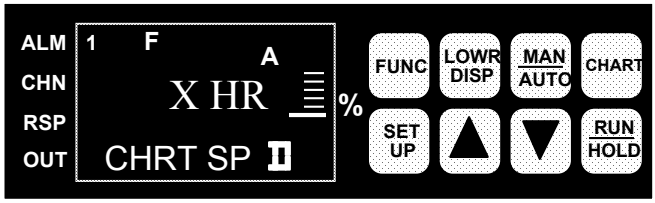

20951

Figure 2—Operator interface includes displays and keypad for comprehensive interaction with the recorder and the process.

Options, continued

- ***Configuration Lockout Switch*** — This security switch limits access to configuration parameters, including the Hot Milk Diversion Setpoint, so that they may not be changed without detection.
- ***CE Mark*** — Conformity with 73/23/EEC, Low Voltage Directive and 89/336/EEC EMC Directive.
- ***Approval Body Options*** — FM approval, CSA certification and UL Listing or a combination is available options.
- ***Customer ID Tag*** — (30 characters max.)

User Configurable

In the DR4500A Series recorder, microprocessor control replaces conventional electro-mechanical recording techniques. This means that its software now primarily determines the recorder's capabilities.

Since Honeywell has preprogrammed a variety of functional capabilities into the recorder, you only have to configure those functions that are specific for the given application. You configure the recorder by following English language prompts that appear in the digital displays.

The configuration data (type of input, chart speed, chart range, alarm settings, tuning constants, etc.) are stored in nonvolatile memory for safe keeping in the event of a power failure.

Operator Interface

Two digital displays (Figure 2) present the process variable (PV) value and by key selection, the controller set point; controller output; deviation from reference input; or engineering units as desired. The lower display can be set to scroll or hold.

When the optional inputs for measuring the temperature at the divert valve is active, the lower display indicates the temperature being measured at the divert valve as the default value. In configuration mode, digital displays are pre-empted by English language prompts and values that you use to enter configuration data.

Indicators light to show alarm conditions, which channel PV is on display, use of remote set point, which output relay is on, selected temperature unit, and controller's mode of operation.

A deviation bargraph lets operators tell at a glance if the process variable is at, above, or below the controller's setpoint. The keypad through which configuration data is entered also serves as an integral automatic/manual station that provides bumpless transfer for controllers.

Recording and Printing

Both the chart and the printhead are driven by the stepper motors, which are controlled by the microprocessor allowing precise maintenance free operation.

Since chart speed is configurable, you can easily alter the chart speed through the keypad. Gear changing or additional motors are no longer required.

The microprocessor uses the configured chart range data as well as the input data to determine the proper printhead position. The stepper motor accurately positions the printhead drive.

Distributed by Relevant Solutions | 1.888.858.3647 | relevantsolutions.com

Recording and Printing, continued

By using a “one-pen” printhead that is capable of printing alphanumeric characters, you can now set various “printed” chart data through configuration. This means that such chart data as range marking in engineering units, digital values for process variables, and trace identification are easily personalized for the application. This data, plus printed time lines and engineering units of scale eliminate the need to maintain an inventory of a variety of preprinted charts.

The Truline recorder uses a dot fill technique from a microprocessor algorithm to produce a continuous analog trace of a process variable.

Digital Controller

The DR4500A Series recorder controller includes an integral microprocessor-based, one or two loop, PID controller. The recorder controller produces a 4–20mA output for controlling the Hot Water loop or Flow and on-off relay output for the divert valve.

As with the record functions, English language prompts quickly guide you through the entry of all the controller’s configurable parameters.

A second optional control output is available to control system back pressure on the DR45AP version. In addition to this, a high pressure limit output can be set.

Diagnostics

All DR4500A Series recorders include self-diagnostic systems that check critical operations and provide error messages to alert you about detected faults.

Power-up self-diagnostics is a microprocessor controlled diagnostic program that runs tests on selected circuitry when the recorder is powered up. A “key” test allows you to initiate, on demand, a self-diagnostic routine that checks the keypad and front panel displays.

Process Interface

Power, input, and output wiring connect to terminations inside the case. Knockouts in the sides and bottom of the case accept conduit connections for convenient wire entry.

Construction

The DR4500A Series recorder is housed in a molded case, which can be panel or surface mounted. Circuitry is partitioned on printed circuit boards for ease of service. A UL and FM approved NEMA4X door is also available.

Input Processing

The recorder requires a 3-A approved sanitary high-speed RTD sensor (Such as RDF Model 21345-6-E-T1$^1/_2$-2) to measure hot milk temperature. Various types of sanitary fittings and sizes available with this highly responsive, reduced tip sensor will meet your specific application requirements.

For DR45AH/AS recorders using the optional Digital Reference Measurement, a 3-A approved sanitary high-speed, dual element RTD sensor (Such as RDF Model #21345(SP)-6-E-T1$^1/_2$-2) or equivalent is required to measure the Hot Milk Temperature and the Digital Reference Temperature.

Each input is sampled at a rate of 3 times per second for 1 or 2 inputs, or 3 times in 2 seconds for 3 or 4 inputs. Each sample is amplified and then converted to a digital signal which is isolated and passed to the microprocessor. A digital filter with configurable time constants lets you apply input signal smoothing as desired. All non-linear inputs are linearized by the microprocessor.

In the unlikely event of failure, you can easily and quickly replace the resistance bulb temperature sensor.

Compliance to Milk Ordinance Regulations

DR45AH/AS/AP fully complies with the strict regulations of the “Grade A Pasteurized Milk Ordinance”.

Compliance features include:

- **Internal configuration switch**
  This security switch limits access to configuration parameters.

  In the switch “off” position, you can configure all the recorder/controller parameters to the desired value.

  The “on” position locks the majority of the configurable parameters, including hot milk diversion setpoint, so that they may not be changed.

  The only functions remaining in the “on” (locked) position are:

  Chart - start the chart or place it in hold.

  Man/Auto - You can place the hot water temperature controller (which controls the Milk temperature indirectly) in Manual or Automatic mode as defined below:

  MAN - The output signal to the hot water valve is manually controlled.

  AUTO - The setpoint for the hot water controller is adjustable.

  Lowr/Disp - Lets you scroll through the process variable inputs, outputs, setpoints and deviation from setpoint.

  Configuration - allows changes to Control 1 and Control 2 tuning parameters plus adjustments to time/date/day/year.

- **Diversion Valve Position Indication**
  Red and Green lights, visible through the door, indicate flow diversion valve position.
  Red indicates flow diversion,
  Green indicates forward flow.

- **Electronics Access Control**
  Chart Plate sealing provisions, using a wire lead seal, prevent access to the electronics and the internal configuration switch.

Model DR45AH
Recorder/Controller

On the DR45AH recorder, the divert valve temperature is printed on the chart when Input 1 is programmed as a Digital Reference Temperature Indicator.

When a diversion occurs, the DR45AH recorder/controller will automatically print on the chart the temperature measured at the divert valve by the Digital Reference Thermometer and then, when forward flow is started again after the diversion, it will print the temperature again.

In addition, there are red and green indicator lights on the front of the recorder that provide a visual indication of forward flow or flow diversion.

Milk Pasteurization Process

Figure 3 is a flow diagram of the HTST milk pasteurization process. Milk flows from the raw milk supply tank through the plate-type heat exchanger, where it is heated to pasteurization temperature prior to entering the holding tube.

The tube size ensures that the milk remains at the pasteurization temperature for the required time.

Hot milk temperature is measured as it leaves the holding tube. If this temperature is above the pasteurization temperature, the DR45AH HTST allows milk flow to proceed to packaging or storage. If the milk is below pasteurization temperature, the DR45AH HTST diverts it to the raw milk tank for reprocessing.

For this application, DR45AH HTST uses two analog inputs, one digital input, one 3-mode controller and one on-off controller to control:

- hot water flow to the plate heat exchanger
- Flow diversion valve position.

Pasteurization temperature control consists of recording the information shown on the circular chart (Figure 4) and implementing the following strategies:

Model DR45AH
Recorder/Controller, continued

Milk Pasteurization Process , cont.

1. The first analog input is hot water temperature (if Digital Reference Temperature option is selected, then Input 3 is the Hot Water Temperature) , which indirectly controls milk temperature in the plate heat exchanger. This temperature may be recorded.
2. The hot milk temperature is the second analog input. This temperature is recorded.

   The high-precision RTD sensor provides this temperature measurement. DR45AH HTST uses 100-ohm (α = 0.00385) platinum bulb actuation to provide hot milk temperature measurement accuracy of ±0.3°F
3. A switch on the flow diversion valve provides the digital input to activate the frequency pen that records the valve position on the outer portion of the chart. The user supplies and installs the two relays that connect the recorder/controller to the pasteurizer system wiring.

You can also record the flow diversion temperature setpoint without an additional analog input.

Model DR45AS
Safety Thermal Limit Recorder

The DR45AS (STLR) model provides all the same features of the DR45AH HTST recorder without the integral hot water control loop.

The DR45AS model is set up to record the hot milk temperature as well as the flow diversion valve position and to indicate this position using red and green lights on the front of the recorder.

Optionally, it can also be set up with the integral Digital Reference feature.

Model DR45AP
Recorder/Controller

The DR45AP Pasteurization Flow recorder/controller can be set up to control the flow rate in a pasteurization process.

In addition to the normal divert valve control provided by high and low flow limit setpoints, optional inputs can be set up to display and record the Raw and Pasteurized pressures in the system.

The recorder/controller will display, in the lower display, the system high and low pressures from independent pressure transmitters and control the system back pressure using the second control output from the recorder/controller.

In addition, a high-pressure limit output can be set.

Optional red and green lights are available on the front of the recorder that provide a visual indication of forward flow or flow diversion.

Milk Pasteurization Process

The DR45AP controls the flow rate in a pasteurization process (Figure 3). The flow is controlled from the flow input from a pressure transmitter or Magnetic flowmeter in the constant flow line.

The recorder uses PID control and a 4-20mA output to control a variable speed pump, which adjusts the flow in the system.

The differential pressure function uses pressure inputs from Input 2 and Input 3 to measure and display the high and low system pressures (Input 2 – Input 3) and uses this value and the optional second 4-20 mA control output to control the system back pressure.

Diverts are based on High Flow or Low Flow setpoints configured in the recorder/controller. Diversion to the Raw milk tank occurs when the flow rate is below the Low Flow setpoint or above the High flow setpoint.

There is a Time Delay that can be configured to occur before forward flow will begin. The configurable range for this time delay is from 0 to 60 seconds.

continued

Model DR45AP
Recorder/Controller, continued

Milk Pasteurization Process, continued

For Pasteurization Flow, DR45AP uses one analog input for flow, one digital input, one three mode controller, and one On/Off controller to control:

- process flow rate
- flow diversion valve position

If controlling system back-pressure, two additional analog inputs and one 3-mode, 4-20 mA controller with two additional relay outputs is required.

Pasteurization flow control consists of recording the information shown on the circular chart (Figure 5) for Input 1 flow and implementing the following strategies:

3. The first analog input is Process Flow.
2. Optional Inputs 2, Input 3, and Control 2 output can be set to record the system high and low pressure for differential pressure measurement and to control the system back pressure.
3. A switch on the flow diversion valve provides the digital input to activate the frequency pen that records the valve position on the outer portion of the chart. The user supplies and installs the two relays that connect the recorder/controller to the pasteurizer system wiring.

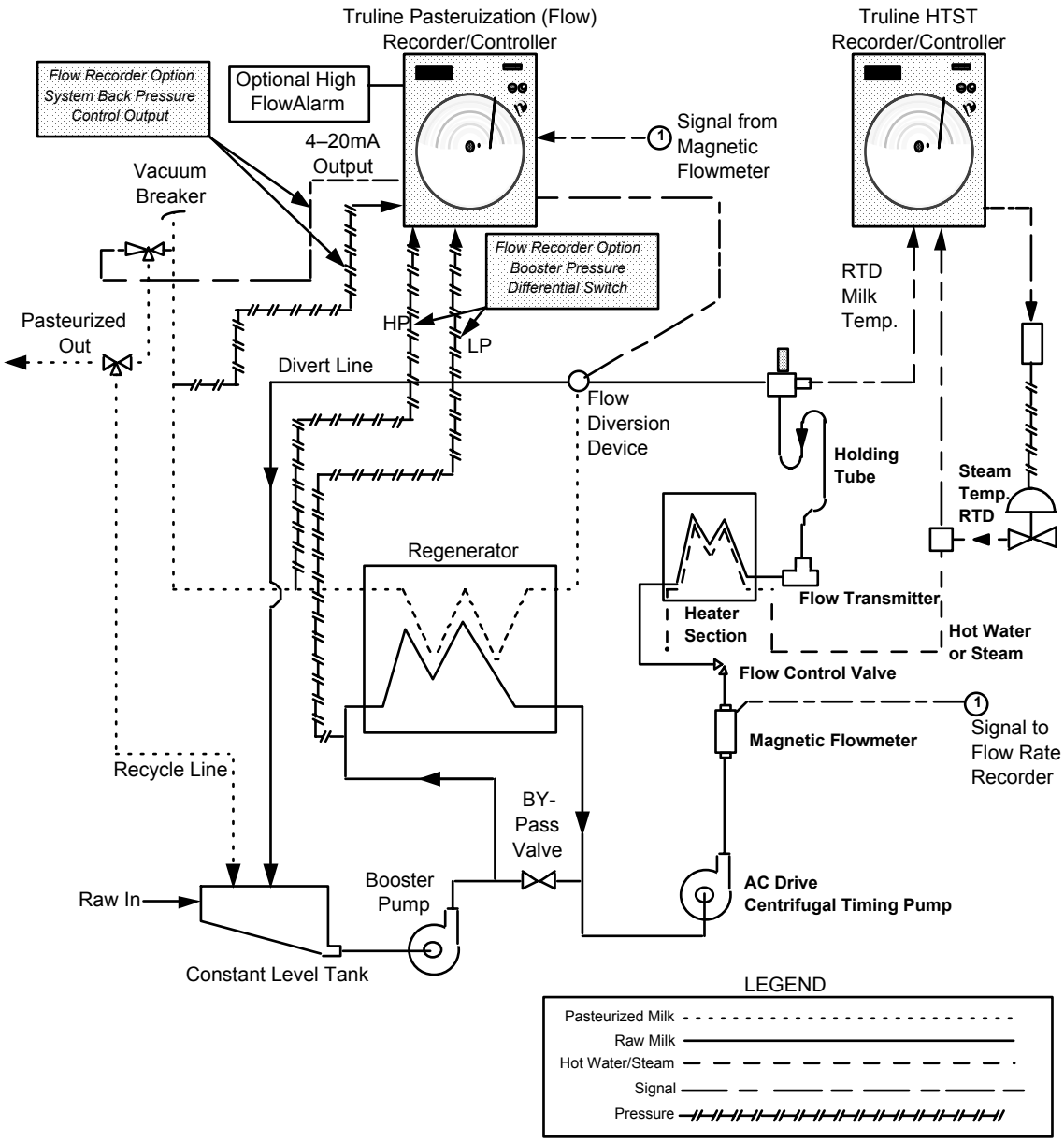

Figure 3—Diagram of the Milk Pasteurization Process

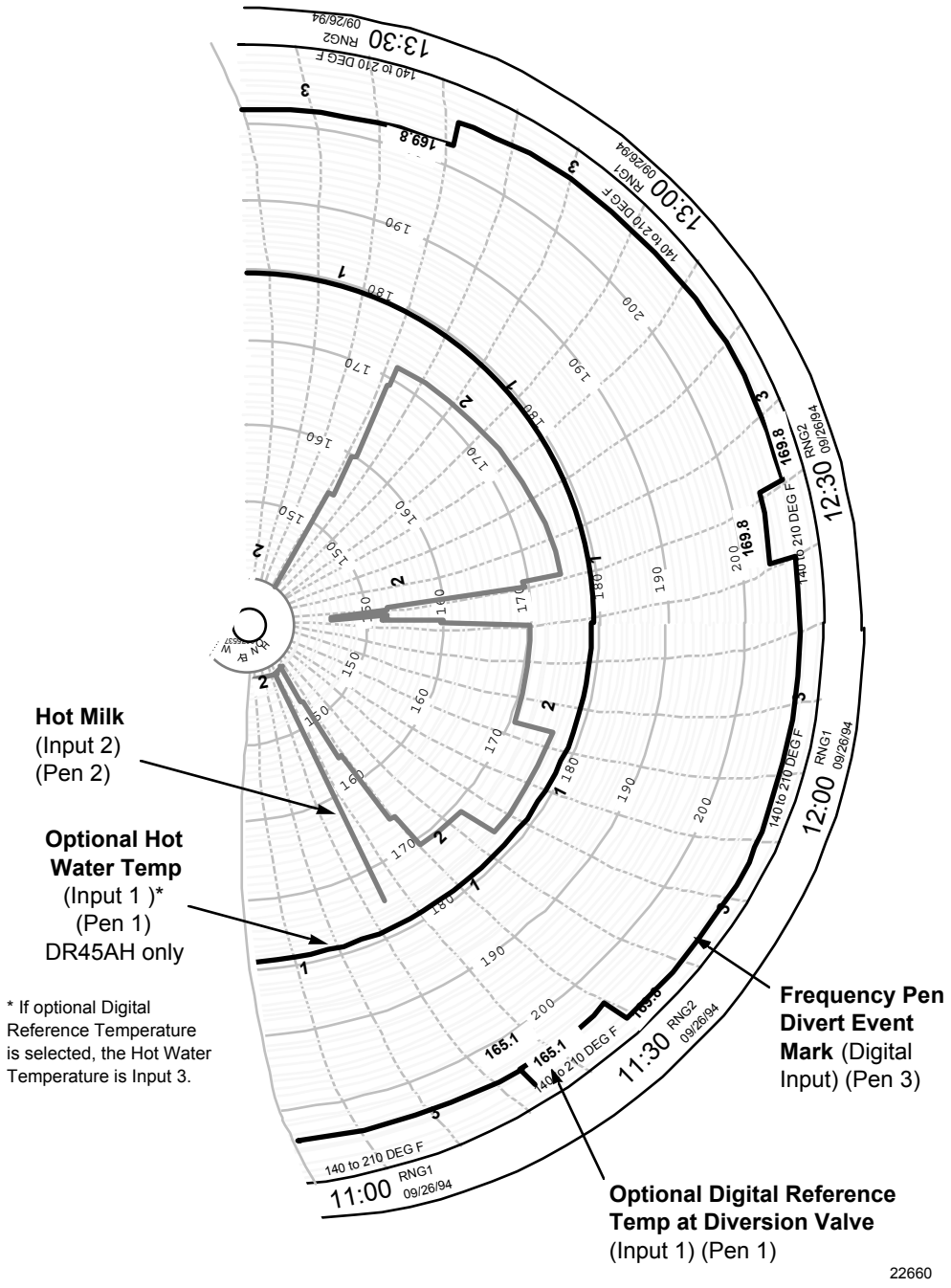

Figure 4—Simulated Printed Chart – HTST Model DR45AH, STLR Model DR45AS

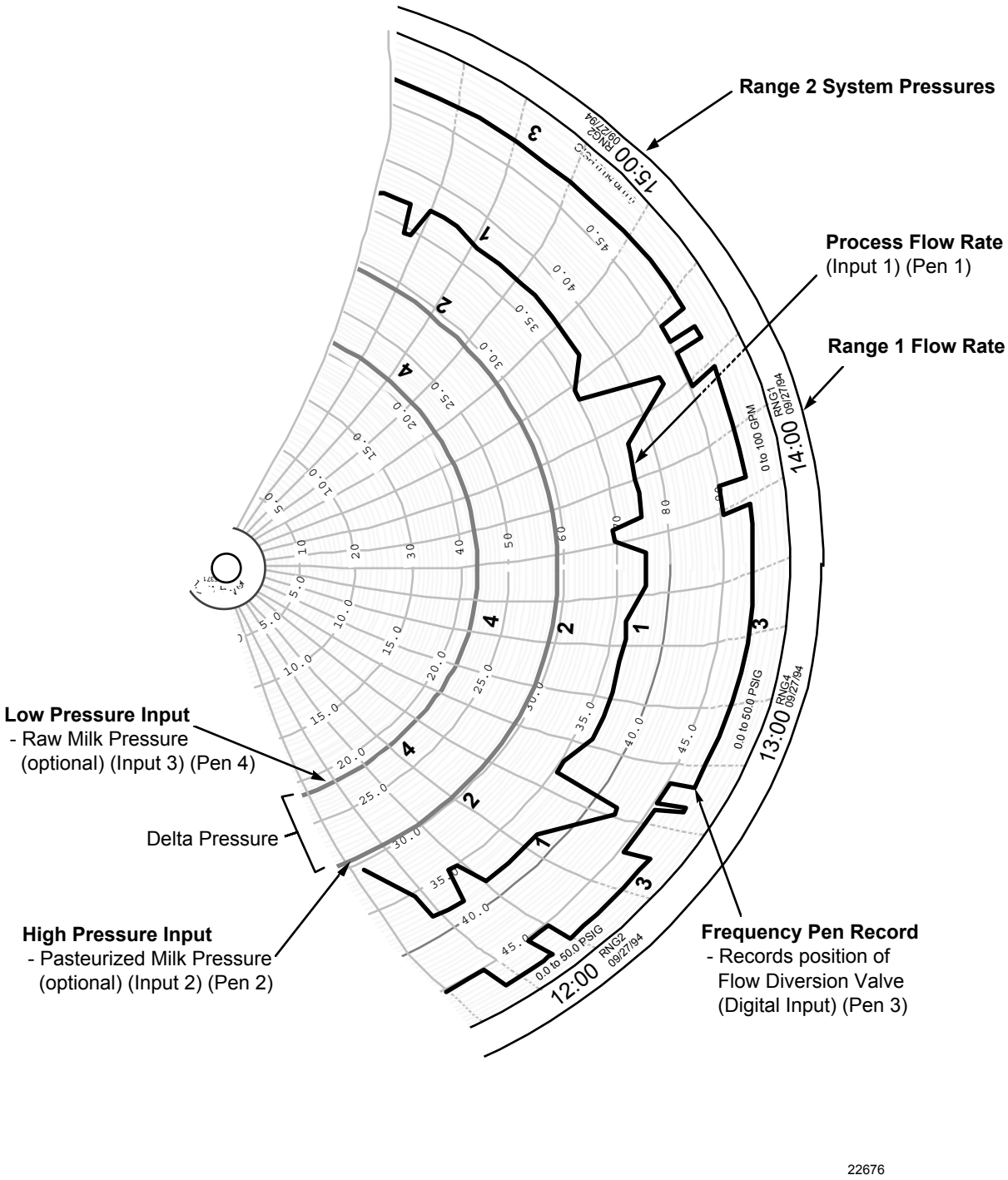

Figure 5—Simulated Printed Chart – Flow Model DR45AP

Specifications

Input Actuations

Number of Inputs	***Model DR45AH***		
	Two channel model:	Two inputs	Standard (Hot Milk and Hot Water)
	Three channel model:	Three inputs	Optional (Cold Milk or Digital Reference)
	Four channel model:	Four inputs	Optional (Cold Milk or other temperature)
	Model DR45AP		
	One channel model:	One input	Standard
	Two channel model:	Two inputs	Optional (System High Pressure Measurement)
	Three channel model:	Three inputs	Optional (System Low Pressure Measurement)
	Four channel model:	Four inputs	Optional
	Model DR45AS		
	One channel model:	One input Two Input	Standard (Hot Milk) Optional Digital Reference Inputs 2–4 Optional

Model DR45AH /AS (Default Input)	Model DR45AH and STLR use a Platinum 100 ohm RTD input. (High Speed RTD sensors required)				
	Range		**Reference Accuracy**		**Temp. Stability ± Degrees Error Per 1 Degree ΔT**
Types of Input Actuation[1]	**°F**	**°C**	**± °F**	**± °C**	
RTDs[2] Platinum 100 ohms* (100RH)	**–130** to **392**	**–90** to **200**	0.3	0.16	0.05

Model DR45AP (Default Input)	The Pasteurization (Flow) model DR45AP uses a 4 to 20 mA input.				
Linear Milliamperes dc	4 to 20	——	0.10 %	——	0.004 % /°F

[1] Not all input Actuations are available on all models of the Truline recorder. Consult Model Selection Guide for information.
*IEC Alpha (α) = 0.00385 Ω/Ω/°C

[2] Includes reference junction calibration of ± 0.01degrees using standard "ice bath" method of calibration. Factory calibration at reference ± 1.2°F. Note that factory calibration may vary by as much as ± 10 microvolts or ± 0.3 ohms for RTDs which means recalibration may be required to achieve stated accuracy.

ATTENTION When used as a standard Truline recorder, refer to Specification Sheet 44-45-03-14 for available input actuations and reference accuracy.

Specifications, continued

Design	
Digital Indication Accuracy	1 digit
Minimum Input Span	Range is fully configurable with span limitation of the operating range selected.
Input Impedance	*4-20 mA dc:* 250 ohms *0-10 Vdc:* 200K ohms *All others:* 10 Megohms
Source Impedance	*RTD:* 100 ohms per lead maximum
Sampling Rate	Each input sampled 3 times a second (1 or 2 inputs); 3 times in 2 seconds (3 or 4 inputs).
Input Filter	*Software*: Single pole low pass section with selectable time constants (off to 120 seconds).
Controller Output	• *On-Off* One SPST electromechanical relay. Control action can be set for direct or reverse; N.O. or N.C. contact selectable. Relay Contact Ratings: Resistive Load: 5A @ 120 Vac, 2.5A @ 240 Vac Inductive Load: 50 VA @ 120 Vac or 240 Vac • *Current Proportional* 21 mA dc maximum into a negative or positive grounded or non-grounded load of 0 to 1000 ohms. Output range can be set between 4 and 20 mA, and as direct or reverse action. Resolution: 10 bits Accuracy: 0.5 % full scale **DR45AH -** comes standard with one 4-20mA output for temperature control and ON/Off control for Divert Valve. **DR45AP** - comes standard with one 4-20mA output for Flow control and with On/Off control for Divert Valve. There is a configurable Time Delay on the Divert Valve On/Off forward flow. Also, optional 2nd 4-20mA control output for back system pressure control, relay output for high pressure alarming, and relay output for low pressure limit (Booster pump control). **DR45AS** - has divert valve control action, but no other control output.
Auxiliary Linear Output (Optional)	21 mA dc maximum into a negative or positive grounded load or non-grounded load of 0 to 1000 ohms. Output range can be set between 0 to 21 mA, and as direct or reverse action. It can be configured to represent any one of 10 parameters. The range of the auxiliary output, as a function of the selected variable, can be scaled. This output can be used as a second current output for current duplex outputs. *Resolution:* 12 bits over 0 to 21 mA *Accuracy:* 0.2 % of full scale *Temperature Stability:* 0.03 % F.S./°C
Alarm Output	Alarm contact for Digital Reference Input provides ability to alarm on the difference between Hot Milk and Digital Reference temperature on Model DR45AH/AS. *Resistive Load:* 1 A @120 Vac, 1/2 A @ 240 Vac

Specifications, continued

Design, continued	
Digital Displays	Vacuum fluorescent, alphanumeric. A six-digit display dedicated to the process variable. Alternate information displayed during configuration mode. An eight-digit display shows key selected operating parameters. Also provides guidance during configuration. Digital Reference Temperature or High/Low Pressure are the default values shown in the lower display. Hot milk temperature (Input 2) Default Display on DR45AH/AS models.
Indicators	Channel PV display (CHN 1, 2, 3, or 4) Alarm status (ALM 1, 2) Controller Output (OUT 1 or 2) Remote Set Point (RSP) Temperature unit (F or C) or Engineering units Controller's mode (A or MAN) *DR45AH or DR45AS* - Digital Reference Temperature displayed in Lower Display during normal operation *DR45AP* - High-Low system pressure displayed in lower display during normal operation
Deviation Bargraph	21 segment, color coded deviation bargraph: Green (large) = On Control Green (small) = Deviation to ± 10% of PV
Controller Modes of Operation	Manual Operation Automatic with local set point Automatic with remote set point
Transmitter Supply Voltage	22 Vdc to 26 Vdc at input terminals (50 mA dc at 24 Vdc)
Case/Door	Molded, foamed-Noryl* with gasketed door to meet NEMA 3 enclosure requirements. Panel gasket available separately. An optional UL and FM approved NEMA4X door is also available.
Chart	12-inch (304.8 mm) diameter chart. Plain thermal-sensitive paper. *Chart Speed:* 8 hr., 24 hr., 7 days, or selected hours per revolution. *Hours per Revolution:* 6 to 744 Hr.* (12 hr. for Abrasion Resistant Pen)
Wiring Connections	Terminals inside the case
Color	*Case:* Black *Door (standard):* Caribbean blue, black or Gray
Approval Bodies	U.L. approval depending on model. Consult Model Selection Guide for information. FM approved for Class I, Div 2, Groups A, B, C, D areas depending on model..
Dimensions	See Figure 6.
Weight	16.6 lb. (7.5 kg)
Mounting	Panel or surface mounted. Some adapter kits available for existing panel cutouts.
Options	
Miscellaneous	• Auxiliary Output • Door Lock • U.L. Listing • Customer ID Tag (30 characters maximum) • Lights on Pasteurization Flow Model DR45AP • Digital Reference Measurement

58 Below 8hrs chart speed (24 hrs chart speed with abrasion resistant pen) printing may be degraded.
** Registered Trademark – General Electric Co.

Distributed by Relevant Solutions | 1.888.858.3647 | relevantsolutions.com

Specifications, continued

Environmental and Operating Conditions				
Parameter	**Reference**	**Rated**	**Extreme**	**Transport and storage**
Ambient Temperature	67 to 77 °F 19 to 25 °C	58 to 131 °F 15 to 55 °C	32 to 131 °F 0 to 55 °C	–40 to 151 °F –40 to 66 °C
Relative Humidity (%RH)	0 to 55*	10 to 90*	5 to 90*	5 to 95*
Vibration Frequency (Hz) Acceleration (g)	 0 0	 0 to 70 0.1	 0 to 200 0.2	 0 to 200 0.5
Mechanical Shock Acceleration (g) Duration (ms))	 0 0	 1 30	 5 30	 20 30
Mounting Position from Vertical Tilted Forward Tilted Backward Tilted to Side (**±**)	 5˚ 5˚ 5˚	 5˚ 30˚ 10˚	 5˚ 90˚ 20˚	 Any Any Any
Power Requirements Voltage (VRMS) Frequency (Hz)	 119 to 121 238 to 242 49.8 to 50.2 59.8 to 60.2	 102 to 132 204 to 264 49 to 51 59 to 61	 102 to 132 204 to 264 48 to 52 58 to 62	 N/A N/A N/A N/A
Power Consumption	24 watts maximum			
General Reference Data				
Stray Rejection	*Common Mode Rejection Ratio:* 120dB or 1 LSB (whichever is greater) at 60 Hz with maximum source impedance of 100 ohms. *Normal Mode Rejection Ratio:* 60dB with a 100% span peak-to-peak maximum at 60 Hz.			
Static Charge Effects	Exposed panel surfaces capable of withstanding a discharge from a 250pf capacitor charged to 10 KV through 100 ohms.			
RFI Susceptibility	Capable of withstanding an EMI-field generated from a 5-watt transmitter being held at 1 meter, and operating at 151.685 and 450 MHz.			
Line Noise Effects	Field terminals for connecting power line to recorder can withstand the IEEE Surge Withstanding Capability Test to a level of 2.5KV.			
Stylus Life	Typically capable of printing one chart per day for five years under clean room conditions.			
Technical Assistance	Toll-free 800 number puts technical assistance only a phone call away.			
FDA Compliance	The Honeywell Pasteurization High Temperature Short Time (HTST) DR45AH, Safety Thermal Limit Recorder (STLR) DR45AS, and Pasteurization Flow DR45AP Recorder/Controller comply with the requirements of the dairy industry set forth by the U.S. Department of Health and Human Services, Food and Drug Administration, Grade A Pasteurized Milk Ordinance. (1993)			

* The maximum rating only applies up to 104 °F (40 °C). For higher temperatures, the RH specification is derated to maintain constant moisture content.

Specifications subject to change without notice.

WARRANTY/REMEDY

Honeywell warrants goods of its manufacture as being free of defective materials and faulty workmanship. Contact your local sales office for warranty information. If warranted goods are returned to Honeywell during the period of coverage, Honeywell will repair or replace without charge those items it finds defective. The foregoing is Buyer's sole remedy and is **in lieu of all other warranties, expressed or implied, including those of merchantability and fitness for a particular purpose**. Specifications may change without notice. The information we supply is believed to be accurate and reliable as of this printing. However, we assume no responsibility for its use.

While we provide application assistance personally, through our literature and the Honeywell web site, it is up to the customer to determine the suitability of the product in the application.

Distributed by Relevant Solutions | 1.888.858.3647 | relevantsolutions.com

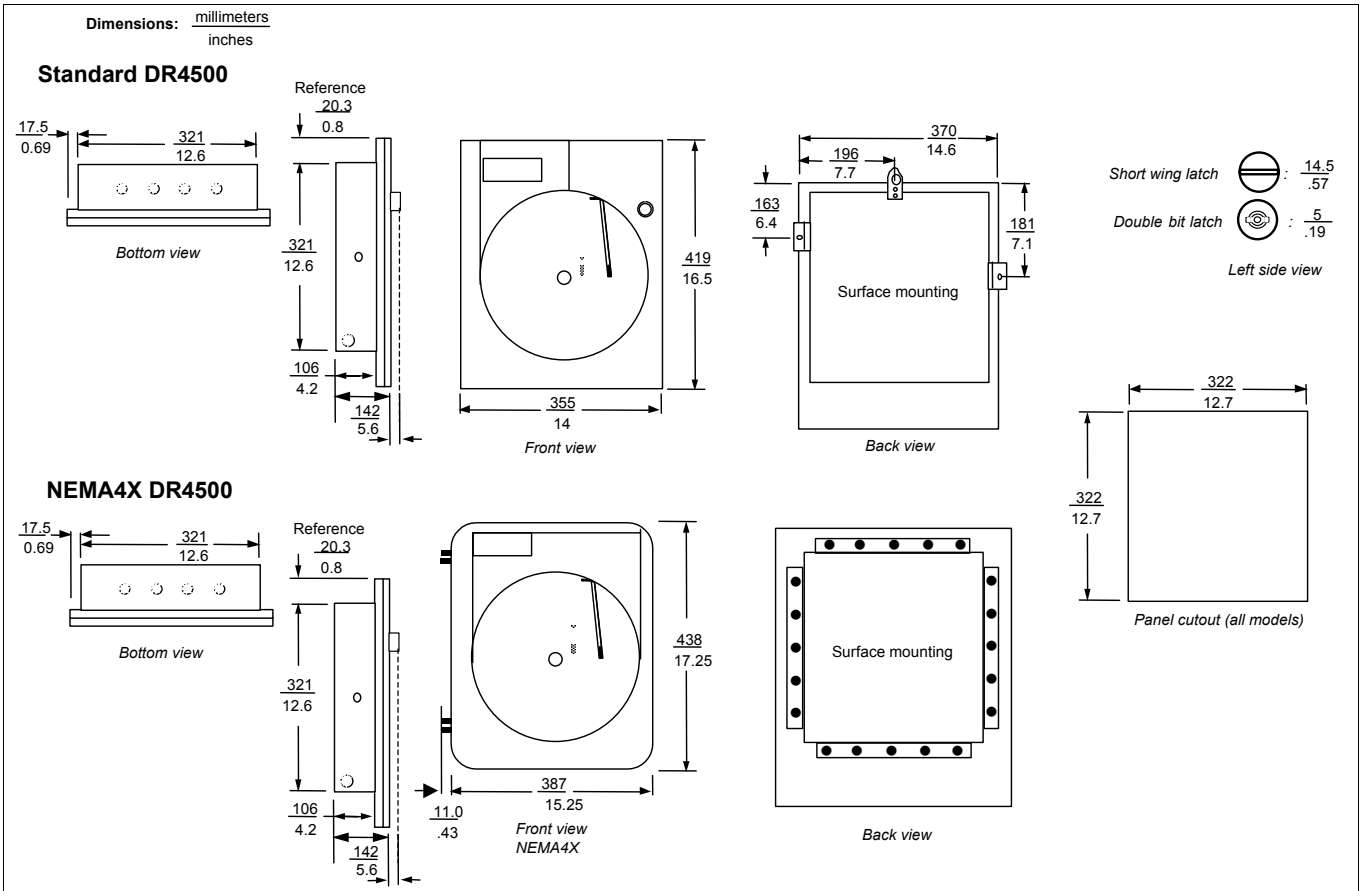

Figure 6— DR4500A series recorder dimensions - for reference only

Ordering Information

For complete ordering information, request Model Selection Guide 44-45-16-07 for DR4500A Series Circular Chart Recorder.
Honeywell offers a full line of sensors and transmitters that produce a compatible range of dc voltage or current signals which can be used as inputs to the DR4500A Series Recorder.
These devices measure:
Temperature: (Thermocouple or RTD)
Pressure
Flow {4 to 20 mA dc or 1 to 5 Vdc process transmitter}
Liquid Level
Relative Humidity

Honeywell

Industrial Measurement and Control
Honeywell
1100 Virginia Drive
Ft. Washington, PA 19034

44-45-03-16 0802 Printed in USA

www.honeywell.com/imc/

Distributed by:
relevant.
888.858.3647 | relevantsolutions.com