Dwyer

SERIES MBLT | MERCOID BY DWYER

MINIATURE SUBMERSIBLE LEVEL TRANSMITTER

Only 0.63″ (16 mm) in Diameter, Perfect for Wells and Boreholes, Up to ±0.10% Accuracy, Low Power Models for Telemetry Systems

NEW!
Low Power Models

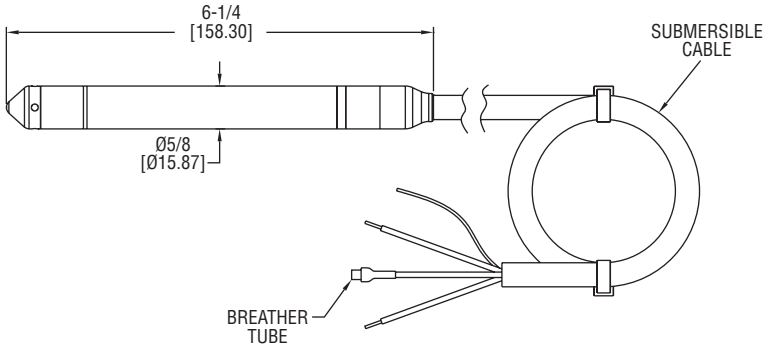

The **SERIES MBLT** Miniature Submersible Level Transmitters measure the height of liquid above the position in the tank referenced to atmospheric pressure. The transmitter consists of a piezoresistive sensing element, encased in a 0.63″ (16 mm) diameter 316 SS housing.

FEATURES/BENEFITS

- Slender 0.63″ (16 mm) diameter design fits in narrow openings
- Constructed for years of trouble free service with welded 316 SS body and 316 SS nose cap
- Body top is 316 SS and tapered to prevent damage or snares when pulling the unit out of the installation
- ±0.10% or ±0.25% FS accuracy output is better than BFSL or BSL rated outputs used by most competitors
- Maintenance free filter eliminates particulate or water droplets from entering the transducer
- Comes with a choice of polyether polyurethane or ETFE cable materials for excellent chemical compatibility
- Incorporates lightning and surge protection, eliminating both power supply surges and lightning ground strike transients (surge protection is not guaranteed and is not covered by warranty)

APPLICATIONS

- Ballast tanks
- Ground water monitoring
- Surface water monitoring
- Dewatering
- Down hole
- Remote telemetry
- Remote flood monitoring
- Narrow conduit or pipe installations
- Remediation and environmental monitoring

SPECIFICATIONS

Service: Compatible liquids.
Wetted Materials: Body and nose: 316 SS; Cable: Polyether polyurethane or ETFE; Seals: Fluoroelastomer; Label: Polyolefin.
Accuracy: ±0.25% or ±0.10% FS**.
Temperature Limits: -4 to 176°F (-20 to 80°C).
Compensated Temperature Limits: 0.25%: (0 to 70°C); 0.10%: (0 to 60°C).
Thermal Effect: 0.25%: ±0.45% FS TEB; 0.10%: ±0.30% FS TEB.
Pressure Limit: 2x FS.
Power Requirements: Current output: 10 to 33 VDC; Voltage output: 8 to 33 VDC; 5 mA max (no load).
Output Signal: 4 to 20 mA DC 2-wire or 0 to 5 V* (model depending).
Response Time: < 50 ms.
Max Loop Resistance: 1000 Ω @ 30 VDC (current output).
Voltage Output Impedence: 10 Ω + 4.4 Ω / 100′ cable (voltage output).
Electrical Connections: Wire pigtail.
Mounting Connection: Suspended below point being monitored.
Electrical Protection: Surge/lightning protected per EN61000-4-5, Class 5.
Weight: Body: 0.235 lb (0.107 kg); Cable: 0.037 lb (0.017 kg) per foot.
Agency Approvals: CE.

*Consult factory for additional outputs.
**4.3 to 4.9 psi (10 to 11.54 in w.c.) configured ranges ±0.30% FS accuracy

OPTIONS

For custom ranges, cable lengths, or ETFE cable, contact the website.

ACCESSORY

Model	Description
A-297	Dessicant filter for vent tube. Removes humidity for protection of the sensor. Changes color to show saturation

A-297

MODEL CHART

4 to 20 mA output Model ±0.10%	4 to 20 mA output Model ±0.25%**	0 to 5 V output Model ±0.25%**	Range psi (′ w.c.) [m w.c.]	Cable Length	Cable Type
-	MBLT-2SC-IVPP-5-40	MBLT-2SC-VVPP-5-40	5 (11.54) [3.52]	40 ft	Polyether polyurethane
-	MBLT-2SC-IVPF-15-40	MBLT-2SC-VVPF-15-40	6.50 (15) [4.57]	40 ft	Polyether polyurethane
-	MBLT-2SC-IVPM-5-12.2	MBLT-2SC-VVPM-5-12.2	7.10 (16.40) [5]	12.2 m	Polyether polyurethane
-	MBLT-2SC-IVPM-10-30**	MBLT-2SC-VVPM-10-30**	14.22 (32.84) [10]	9.14 m	Polyether polyurethane
MBLT-2SB-IVPF-20-40	MBLT-2SC-IVPF-20-40	MBLT-2SC-VVPF-20-40	8.66 (20) [6.10]	40 ft	Polyether polyurethane
MBLT-2SB-IVPF-30-50	MBLT-2SC-IVPF-30-50	MBLT-2SC-VVPF-30-50	12.99 (30) [9.14]	50 ft	Polyether polyurethane
MBLT-2SB-IVPM-10-15.2	MBLT-2SC-IVPM-10-15.2	MBLT-2SC-VVPM-10-15.2	14.21 (32.81) [10]	15.2 m	Polyether polyurethane
MBLT-2SB-IVPF-50-70	MBLT-2SC-IVPF-50-70	MBLT-2SC-VVPF-50-70	21.65 (50) [15.24]	70 ft	Polyether polyurethane
MBLT-2SB-IVPM-20-26	MBLT-2SC-IVPM-20-26	MBLT-2SC-VVPM-20-26	28.42 (65.62) [20]	26 m	Polyether polyurethane
MBLT-2SB-IVPM-30-36	MBLT-2SC-IVPM-30-36	MBLT-2SC-VVPM-30-36	42.63 (98.43) [30]	36 m	Polyether polyurethane
MBLT-2SB-IVPF-100-120	MBLT-2SC-IVPF-100-120	MBLT-2SC-VVPF-100-120	43.31 (100) [30.48]	120 ft	Polyether polyurethane
MBLT-2SB-IVPM-40-46	MBLT-2SC-IVPM-40-46	MBLT-2SC-VVPM-40-46	56.83 (131.23) [40]	46 m	Polyether polyurethane
MBLT-2SB-IVPF-150-170	MBLT-2SC-IVPF-150-170	MBLT-2SC-VVPF-150-170	64.96 (150) [45.72]	170 ft	Polyether polyurethane
MBLT-2SB-IVPM-60-66	MBLT-2SC-IVPM-60-66	MBLT-2SC-VVPM-60-66	85.25 (196.85) [60]	66 m	Polyether polyurethane
MBLT-2SB-IVPF-200-220	MBLT-2SC-IVPF-200-220	MBLT-2SC-VVPF-200-220	86.62 (200) [60.96]	220 ft	Polyether polyurethane
MBLT-2SB-IVPF-350-370	MBLT-2SC-IVPF-350-370	MBLT-2SC-VVPF-350-370	151.58 (350) [106.68]	370 ft	Polyether polyurethane
MBLT-2SB-IVPM-100-106	MBLT-2SC-IVPM-100-106	MBLT-2SC-VVPM-100-106	142.09 (328.08) [100]	106 m	Polyether polyurethane
MBLT-2SB-IVPM-200-206	MBLT-2SC-IVPM-200-206	MBLT-2SC-VVPM-200-206	284.18 (656.17) [200]	206 m	Polyether polyurethane
MBLT-2SB-IVPF-690-710	MBLT-2SC-IVPF-690-710	MBLT-2SC-VVPF-690-710	298.83 (690) [210.31]	710 ft	Polyether polyurethane

**4.3 to 4.9 psi (10 to 11.54 in w.c.) configured ranges ±0.30% FS accuracy